IoT SuperServer SYS-110C-FHN4T

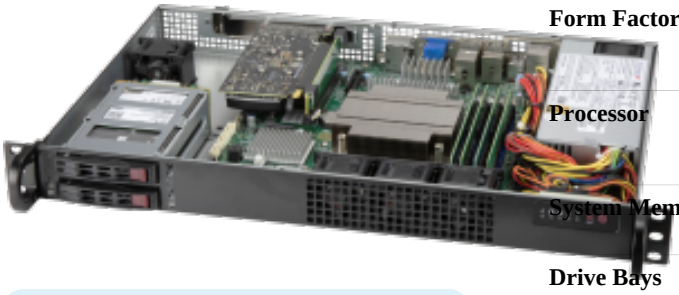

Key Applications

Compact 1U Network Security
Video Surveillance
Office Server, DVR/NVR
Digital Signage, POS

Key Features

- Single Socket LGA-1200 (Socket H5) support 10th Gen. Core™ I & Xeon W-1200 processors;
- 4x DIMMs; Up to 128GB Unbuffered ECC/non-ECC UDIMM;
- 1x PCI-E Gen3 x16 HHHL slot;
- 2 Hot-swap 2.5" SATA3 drive bays;
- 4x 40x28mm 4-pin PWM fans;
- 200W Low Noise AC-DC power supply with PFC;
- Rear-access I/O: 2x 10GBased-T, 2x GbE, 1x Dedicated IPMI, 4x USB3.0, 1x VGA, 1x DVI-D, 2x DP;

More details here

Form Factor	1U Rackmount Enclosure: 437 x 43 x 287mm (17.2" x 1.7" x 11.3") Package: 645.16 x 154.94 x 502.92mm (25.4" x 6.1" x 19.8")
Processor	10th Gen Intel® Core™ i9/i7/i5/i3, Intel® Xeon® W-1200 Processors Single Socket LGA-1200 (Socket H5) supported TDP up to 80W;
System Memory	4 DIMM slots Up to 128GB ECC UDIMM, DDR4-2933MHz
Drive Bays	2x 2.5" SATA drive bays;
Expansion Slots	Slot 1: PCI-E 3.0 x16 HHHL
On-Board Devices	SATA: SATA3 (6Gbps); RAID 0/1 support Chipset: Intel® W480E Network Connectivity: 2x 1GbE BaseT 2x 10GbE BaseT IPMI: Support for Intelligent Platform Management Interface v.2.0 IPMI 2.0 with virtual media over LAN and KVM-over-LAN support
Input / Output	SATA: 2 SATA (6Gbps) port(s) LAN: 2 RJ45 GbE LAN ports 2 RJ45 10GBase-T LAN ports 1 RJ45 Dedicated IPMI LAN port USB: 4 USB 3.0 port(s) (4 rear) Video: 1 VGA port(s) DOM: 1 SuperDOM (Disk on Module) port

© 2022 Copyright Super Micro Computer, Inc. All rights reserved. *Product specifications may change without notice

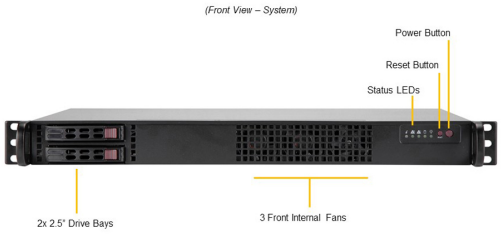

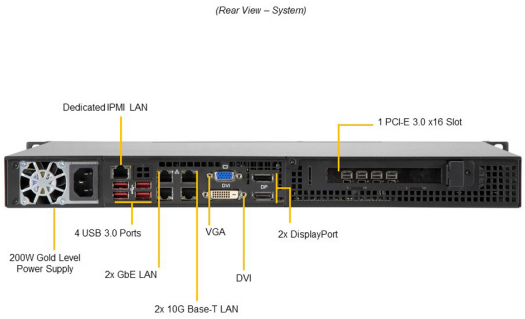

Cooling System	4 heavy duty fan(s)
Power Supply	200W AC 100-240V Power Supplies Dimension (W x H x L): 76.5 x 40.3 x 192.8 mm
Management	IPMI 2.0; SuperDoctor® 5; SUM; AMT; vPro
PC Health Monitoring	CPU: Monitors for CPU Cores, Chipset Voltages, Memory FAN: Fans with tachometer monitoring Status monitor for speed control Pulse Width Modulated (PWM) fan connectors Temperature: Monitoring for CPU and chassis environment CPU thermal trip support, PEPI
Dimensions and Weight	Height: 1.7" (43 mm) Width: 17.2" (437 mm) Depth: 11.3" (287 mm) Gross Weight: 14.1 lbs (6.4 kg) Net Weight: 10 lbs (4.54 kg) Packaging: 6.1" (H) x 25.4" (W) x 19.8" (D) Available Color: Black
Operating Environment	Operating Temperature: 0°C ~ 40°C (41°F ~ 104°F) Non-operating Temperature: -40°C to 70°C (-40°F to 158°F) Operating Relative Humidity: 8% to 90% (non-condensing) Non-operating Relative Humidity: 5% to 95% (non-condensing)
Motherboard	Super X12SCZ-TLN4F
Chassis	CSE-510FT-203B

© 2022 Copyright Super Micro Computer, Inc. All rights reserved. *Product specifications may change without notice

Parts List - (Items Included)

	Part Number	Qty	Description
Motherboard / Chassis	MBD-X12SCZ-TLN4F	1	Super X12SCZ-TLN4F Motherboard
	CSE-510FT-203B	1	1U Chassis
Cable 1	CBL-0296L	1	9" 4 PIN FAN PWS EXTENSION CORD, PBF
FAN 1	FAN-0065L4	1	4028mm 13K RPM 4-PIN PWM FAN for SC813MF, SC113M
Parts	MCP-150-00015-0B	1	Rubber pad, 3.0mm H, 10x10mm
Rear Window	MCP-240-00091-0N	2	1U universal riser card bracket for standard chassis,HF,RoHS/REACH,PBF
Parts	MCP-260-00101-0B	1	1U I/O Shield for X11SSZ on SC510 with EMI Gasket
Air Shroud	MCP-310-00097-0B	1	Air shroud for 4-DIMM size,HF,RoHS
Riser Card	RSC-RR1U-E16	1	RSC-RR1U-E16 with PIC-E x16 output
Heatsink / Retention	SNK-P0049P	1	1U Passive Enhanced Performance CPU Heat Sink for Intel Socket H Series Processors
***Backplane**	BPN-SAS-510T	1	2-port 1U (SC510T) direct-attached backplane, support up to 2x 2.5-inch SAS/SATA HDD/SSD
***Cable 2**	CBL-0061L	2	31.5CM SATA FLAT S-S PBF
***Power Supply**	PWS-203-1H	1	1U 200W Multi-output 80Plus Gold PWS

Notes:

1. Parts with * are inside the chassis
2. Excessive parts might not be shipped, including but not limited to excessive drive trays, fans, riser brackets, air shrouds, IO shields, cables.....etc.